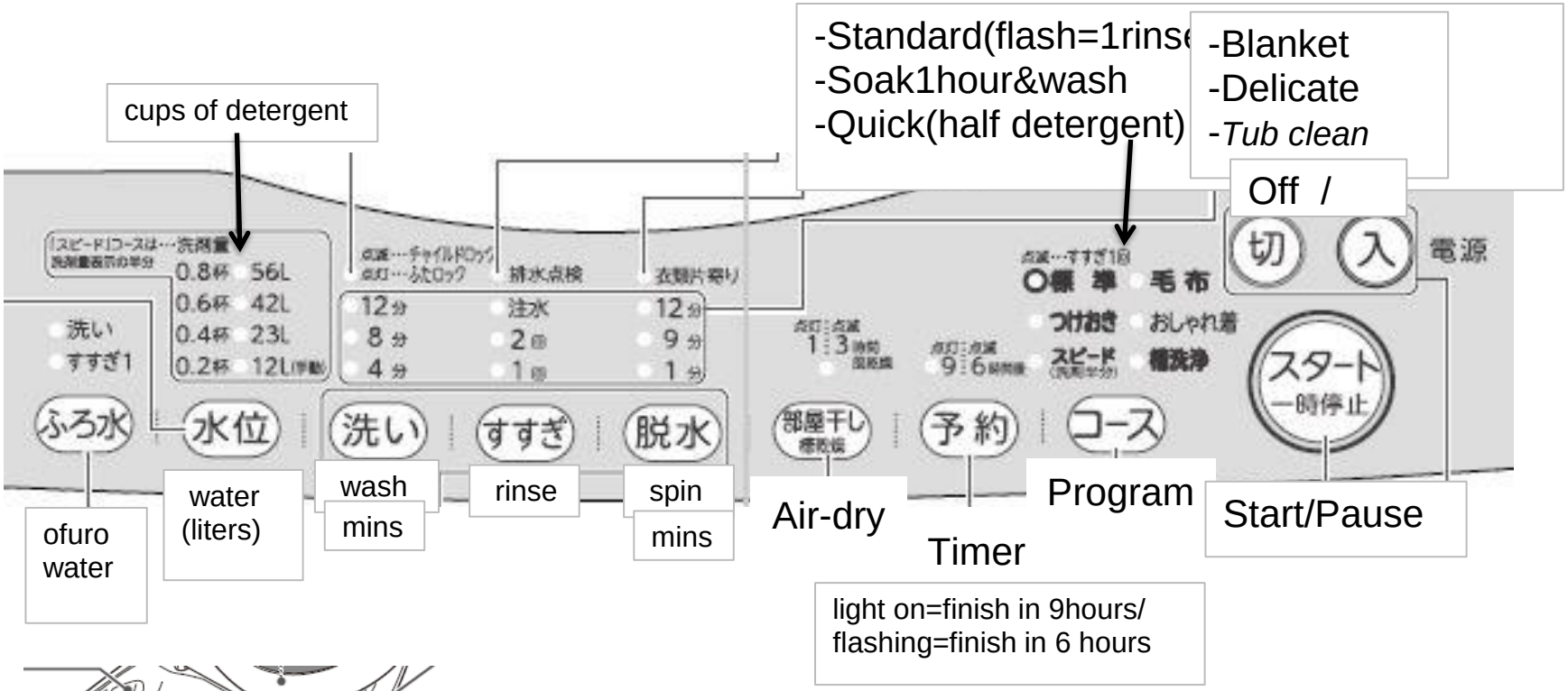

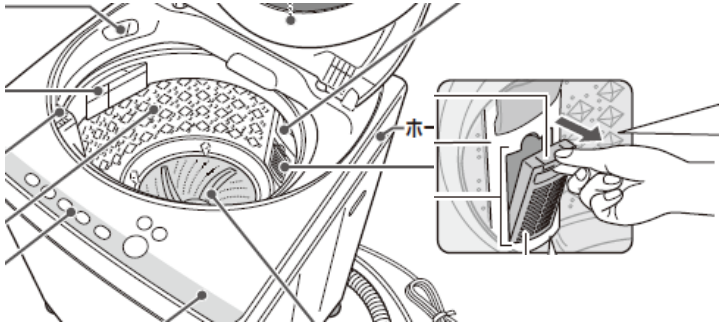

***Clean filter everytime after washing**

AW-7G6/TOSHIBA